TECHNICAL DATA SHEET

TRANSITION FITTING PE/ BRASS

female thread

PE100

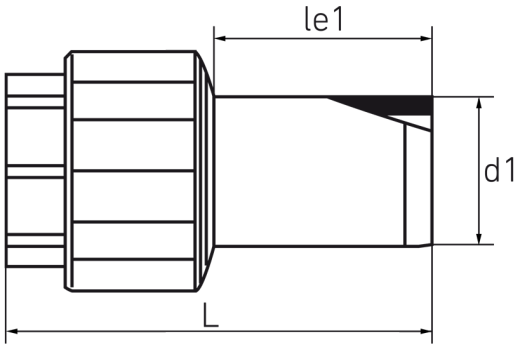

SDR 11

Art. No.	d1 [mm]	Rp [mm]	le1 [mm]	L [mm]	kg
18207222	75	2½"	75	133	1,20

For questions, please feel free to contact us at: Tel. + 49 281 98 414 - 0

© STAR Piping Systems GmbH
All rights reserved