TECHNICAL DATA SHEET

TEE, REDUCED

long spigot for butt- and electrofusion welding

PP

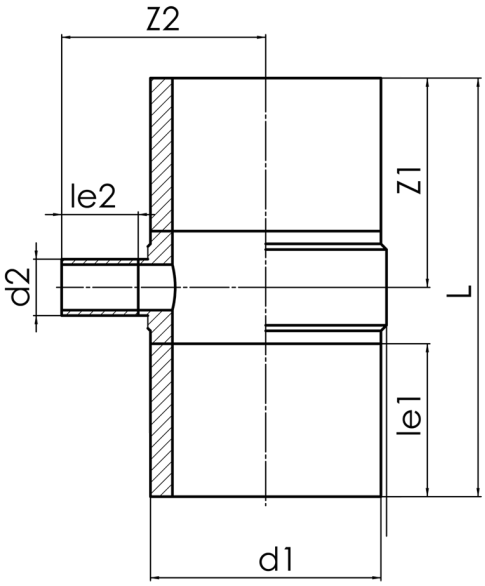

SDR 11

Art. No.	d1 [mm]	d2 [mm]	le1 [mm]	le2 [mm]	L [mm]	z1 [mm]	z2 [mm]	kg
22940141	400	140	300	150	856	381	428	35,90

other dimensions and pressure classes on request

For questions, please feel free to contact us at: Tel. + 49 281 98 414 - 0

© STAR Piping Systems GmbH
All rights reserved