TECHNICAL DATA SHEET

# SEAMLESS BEND

## Normkonform 60°

long spigot for butt- and electrofusion welding
compliant with EN 12201 & EN 1555
DVGW certified

PE100-RC

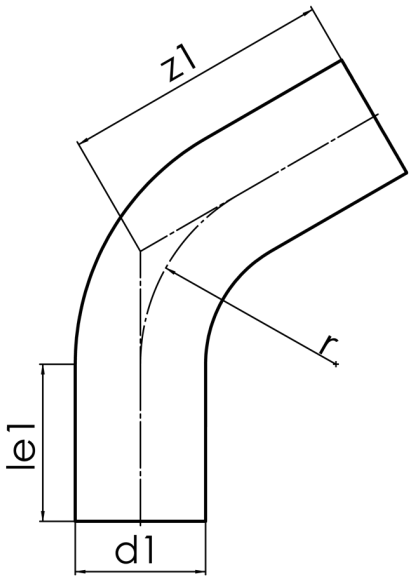


## SDR 17

| Art. No. | d1 [mm] | le1* [mm] | z1 [mm] | r [mm] | kg |
|---|---|---|---|---|---|
| 31600141 | 140 | 150 | 350 | 210 | 1,99 |

other dimensions, materials and pressure classes on request
Tolerance: α ± 5° | z1 ± 50 mm
* minimum „le1“

For questions, please feel free to contact us at: Tel. + 49 281 98 414 - 0

© STAR Piping Systems GmbH
All rights reserved