TECHNICAL DATA SHEET

TEE, REDUCED

short spigot for butt welding

PE100-RC

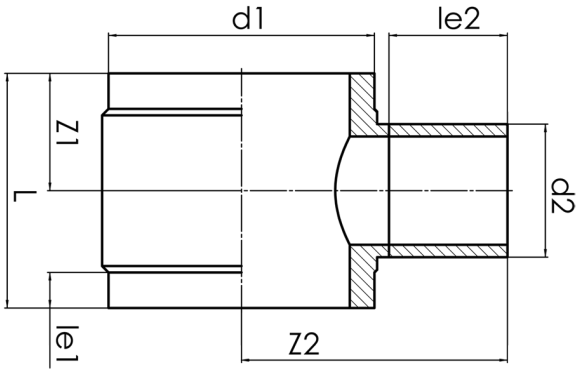

SDR 17

Art. No.	d1 [mm]	d2 [mm]	le1 [mm]	le2 [mm]	L [mm]	z1 [mm]	z2 [mm]	kg
32256091	560	90	75	150	305	152,5	461	19,87

Other materials, dimensions and pressure classes on request

For questions, please feel free to contact us at: Tel. + 49 281 98 414 - 0

© STAR Piping Systems GmbH
All rights reserved