TECHNICAL DATA SHEET

SEAMLESS BEND

45°

r ≈ 2,5 x d
long spigot for butt-and electrofusion welding

PE100

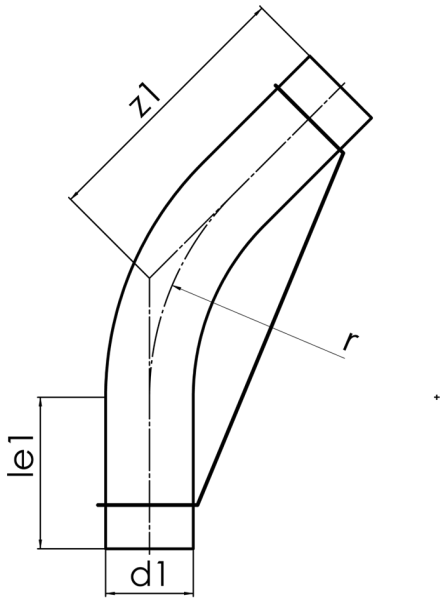

SDR 17

Art. No.	d1 [mm]	le1* [mm]	z1 [mm]	r [mm]	kg
41405061	63	100	220	157,5	0,29

other dimensions, materials and pressure classes on request
Tolerance: α ± 5° | z1 ± 50 mm
* minimum „le1“

For questions, please feel free to contact us at: Tel. + 49 281 98 414 - 0

© STAR Piping Systems GmbH
All rights reserved