TECHNICAL DATA SHEET

ELECTROFUSION ELBOW INJECTION MOULDED

90°

two seperate welding zones from d 200 mm
4,0 mm pin

PE100

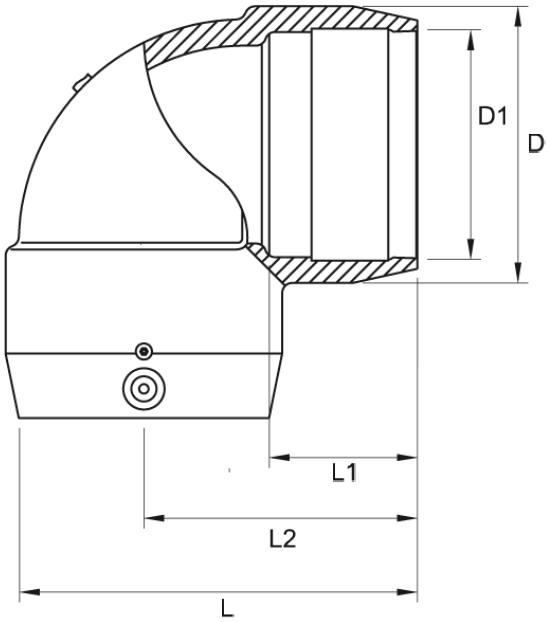

SDR 11

Art. No.	d1 [mm]	D [mm]	L [mm]	L1 [mm]	L2 [mm]	kg
41909122	125	154	228	78	152	1,60

Other materials, dimensions and pressure classes on request

For questions, please feel free to contact us at: Tel. + 49 281 98 414 - 0

© STAR Piping Systems GmbH
All rights reserved