TECHNICAL DATA SHEET

BRANCH, REDUCED

45°

long spigot for butt- and electrofusion welding

PE100

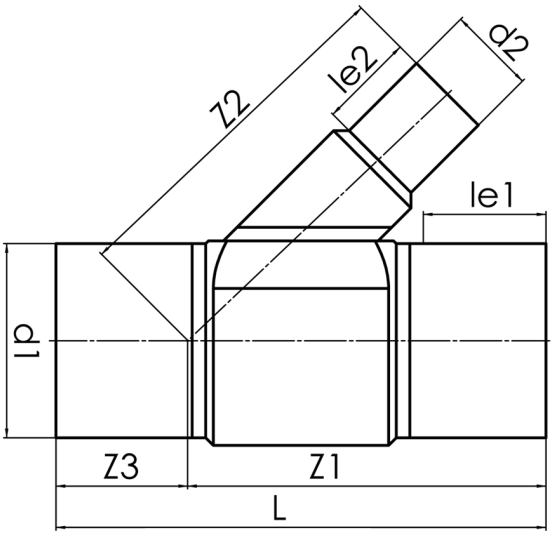

SDR 11

Art. No.	d1 [mm]	d2 [mm]	le1 [mm]	le2 [mm]	L [mm]	z1 [mm]	z2 [mm]	z3 [mm]	kg
42856202	560	200	350	112	1245	940	760	305	122,71

Other materials, dimensions and pressure classes on request

For questions, please feel free to contact us at: Tel. + 49 281 98 414 - 0

© STAR Piping Systems GmbH
All rights reserved