TECHNICAL DATA SHEET

KS SPECIAL FLANGE

drilled according to DIN EN 1092-1 PN 16
with EPDM-O-ring gasket and backing ring steel plastic coated
optional with steel hot-dip galvanized or stainless steel backing ring
long spigot for butt- and electrofusion welding

PE100

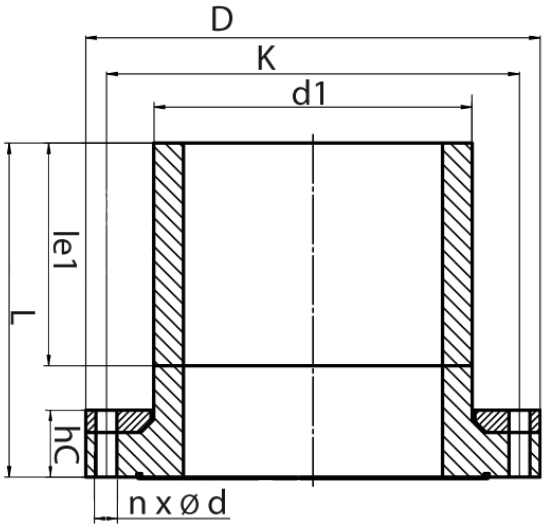

SDR 11

Art. No.	DN [mm]	d1 [mm]	D [mm]	le1 [mm]	L [mm]	K [mm]	n	ød [mm]	M	hC [mm]	kg
43011564	600	560	840	350	545	770	20	36	33	125	160,00

* available for gas pipes with flat surface or NBR-Gaskets

For questions, please feel free to contact us at: Tel. + 49 281 98 414 - 0

© STAR Piping Systems GmbH
All rights reserved