TECHNICAL DATA SHEET

ELECTROFUSION COUPLER

two seperate welding zones from d 500 mm
4,0 mm pin

PE100

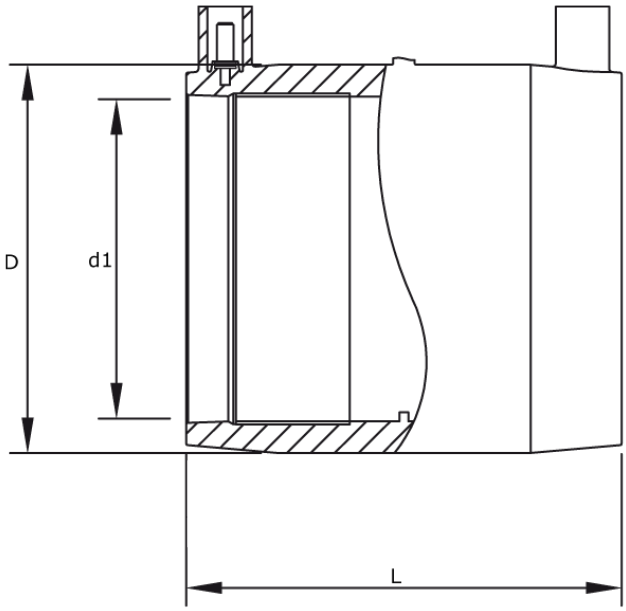

SDR 11

Art. No.	d1 [mm]	D [mm]	L [mm]	kg
43502052	50	61,5	91	0,10

also suitable for SDR 13,6 and SDR 17 applications
other dimensions, pressure classes and materials on request

For questions, please feel free to contact us at: Tel. + 49 281 98 414 - 0

© STAR Piping Systems GmbH
All rights reserved