Technical Data Sheet

BEND SEGMENT WELDED

PP

long spigot for butt- and electrofusion welding
welded from pipe, non-reinforced

α = 90??



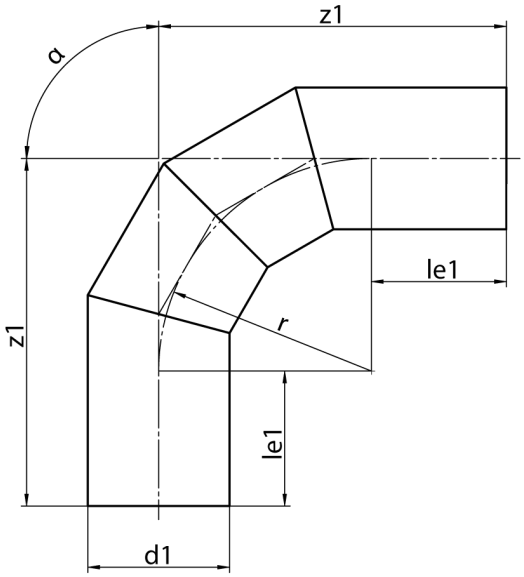

SDR 17,6

fB 0,80

Art. No.	d1 [mm]	le1 [mm]	z1 [mm]	r [mm]	kg
4219071802500000	250	317	625	375	10,8

other dimensions and pressure classes on request
tolerance + / - 2°

For questions, please feel free to contact us at: Tel. + 49 281 98 414 - 0

fB 0,80 Pressure reduction factor 0,8

© STAR Piping Systems GmbH
All rights reserved