Technical Data Sheet

TEE REDUCED

PP

long spigot for butt- and electrofusion welding



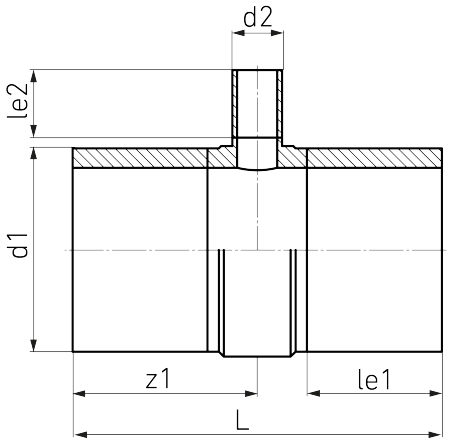

SDR 11

Art. No.	d1 [mm]	d2 [mm]	le1 [mm]	le2 [mm]	L [mm]	z1 [mm]	z2 [mm]	kg
4232301104000200	400	200	300	150	917	381	459	39,8

other dimensions and pressure classes on request

For questions, please feel free to contact us at: Tel. + 49 281 98 414 - 0

Pressure class conform

© STAR Piping Systems GmbH
All rights reserved