Technical Data Sheet

REDUCER ECCENTRIC

PP

short spigot for butt welding
to completely drain the pipeline



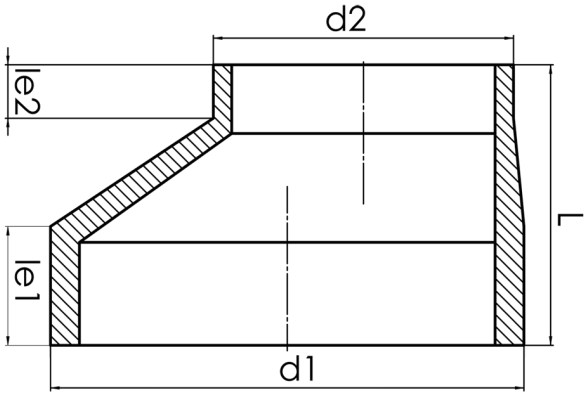

SDR 11

Art. No.	d1 [mm]	d2 [mm]	le1 [mm]	le2 [mm]	L [mm]	kg
4234111104500315	450	315	96	40	221	9,6

other dimensions and pressure classes on request

For questions, please feel free to contact us at: Tel. + 49 281 98 414 - 0

Pressure class conform

© STAR Piping Systems GmbH
All rights reserved