Technical Data Sheet

GAS PIPE

PE100-RC

100 m in coils
Gas pipe, Coex II conform to DIN 8074/8075, DIN EN 1555,
PAS 1075 TYP2, orange



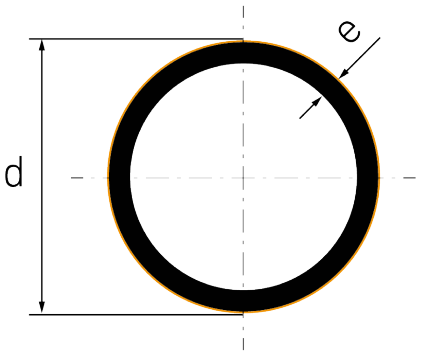

SDR 11

Art. No.	d1 [mm]	e [mm]	VE	VE [Ma??e]	kg/m
4310131100400100	40	3,7	-	D 1280 x 250	0,43

Core diameters, Individual lengths, other materials and pressure classes on request

For questions, please feel free to contact us at: Tel. + 49 281 98 414 - 0

© STAR Piping Systems GmbH
All rights reserved