Technical Data Sheet

GAS PIPE

PE100-RC

20 m lengths
Gas pipe, Coex II conform to DIN 8074/8075, DIN EN 1555,
PAS 1075 TYP2, orange

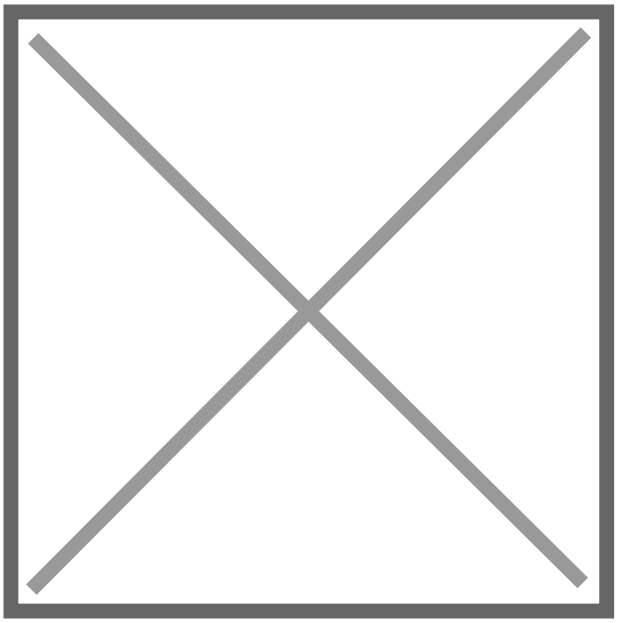

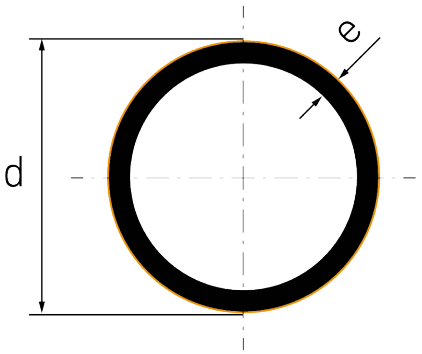

SDR 17

Art. No.	d1 [mm]	e [mm]	VE	VE [Ma??e]	kg/m
4310131702000020	200	11,9	5	1000 x 200	7,12

Individual lengths, other materials and pressure classes on request

For questions, please feel free to contact us at: Tel. + 49 281 98 414 - 0

© STAR Piping Systems GmbH
All rights reserved