Technical Data Sheet

SEAMLESS BEND

PE100-RC **α = 60°**

r ≈ 2,5 x d
long spigot for butt- and electrofusion welding



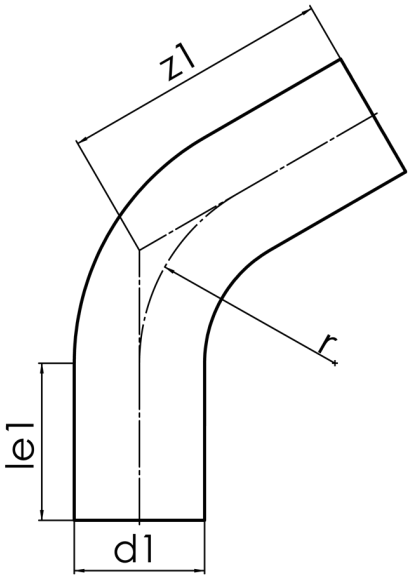

SDR 11

Art. No.	d1 [mm]	le1* [mm]	z1 [mm]	r [mm]	kg
4316051105000000	500	350	1400	1250	165,92

other dimensions, materials and pressure classes on request
Tolerance: α ± 5° | z1 ± 50 mm
* minimum „le1“

For questions, please feel free to contact us at: Tel. + 49 281 98 414 - 0

Suitable for gas Suitable for water Pressure class conform

© STAR Piping Systems GmbH
All rights reserved