Technical Data Sheet

DUCKFOOT TEE FOR CONNECTION TO HYDRANT

PE100-RC **Flansch-System**

Flange-System
with special/ or KS-flange connection (PN10/PN16) with plastic coated backing ring
available as flange system or with pre-assembled BAIO?? EU-piece
long spigot for butt- and electrofusion welding
reinforced



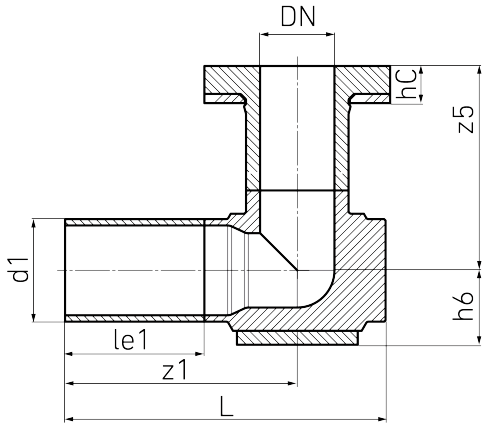

SDR 11

Art. No.	DN [mm]	d1 [mm]	le1 [mm]	le1* [mm]	z1 [mm]	h6 [mm]	z5 [mm]	hC [mm]	kg
4317001100900080	80	90	150	400	250	70	210	40	4,81

other dimensions and pressure classes on request

For questions, please feel free to contact us at: Tel. + 49 281 98 414 - 0

Suitable for water Pressure class conform

© STAR Piping Systems GmbH
All rights reserved