Technical Data Sheet

BEND SEGMENT WELDED

PE100-RC

α = 90??

long spigot for butt- and electrofusion welding
welded from pipe, non-reinforced



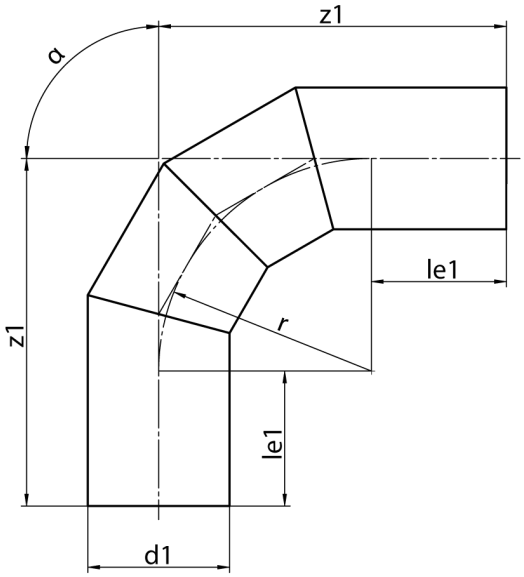

SDR 11

Art. No.	d1 [mm]	le1 [mm]	z1 [mm]	r [mm]	kg
4319071104000000	400	300	900	600	62,3

Other materials, dimensions and pressure classes on request
tolerance + / - 2°

For questions, please feel free to contact us at: Tel. + 49 281 98 414 - 0

Suitable for water Pressure reduction factor 0,8

© STAR Piping Systems GmbH
All rights reserved