Technical Data Sheet

SEAMLESS BEND

PE100-RC **α = 90°**

ri ≈ 1100 mm
long spigot for butt- and electrofusion welding



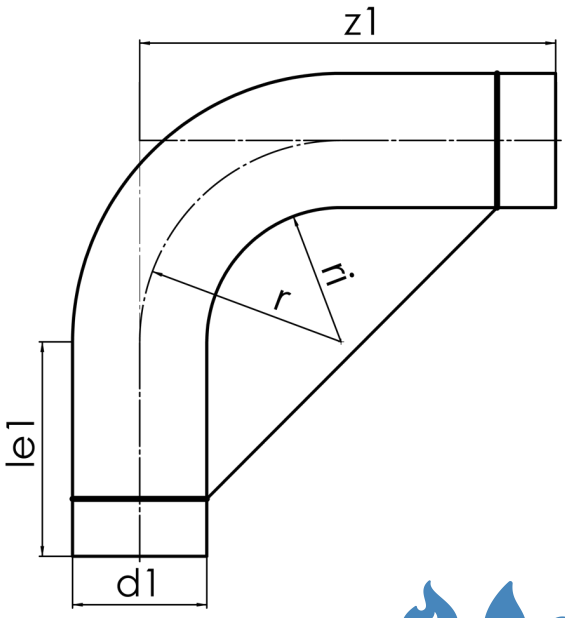

SDR 17

Art. No.	d1 [mm]	le1* [mm]	z1 [mm]	r [mm]	kg
4319711702000000	200	150	1550	1200	17,45

Tolerance: α ± 5° | z1 ± 100 mm
necessary fixations will be charged seperately and credited completely by carriage free returning
* minimum „le1“

For questions, please feel free to contact us at: Tel. + 49 281 98 414 - 0

Suitable for gas Suitable for water Pressure class conform

© STAR Piping Systems GmbH
All rights reserved