Technical Data Sheet

# TEE REDUCED

**PE100-RC**

short spigot for butt welding



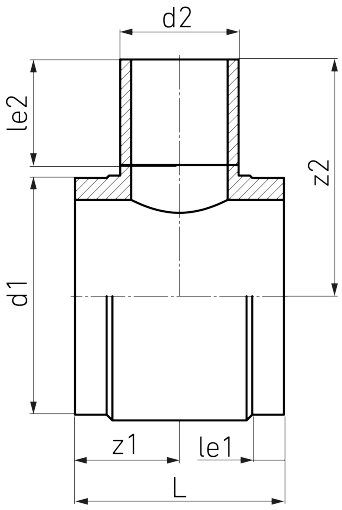


## SDR 11

| Art. No. | d1 [mm] | d2 [mm] | le1 [mm] | le2 [mm] | L [mm] | z1 [mm] | z2 [mm] | kg |
|---|---|---|---|---|---|---|---|---|
| 4332201106300075 | 630 | 75 | 75 | 100 | 290 | 145 | 446 | 32,9 |

Other materials, dimensions and pressure classes on request

**For questions, please feel free to contact us at: Tel. + 49 281 98 414 - 0**

Suitable for gas  Suitable for water  Pressure class conform

© STAR Piping Systems GmbH
All rights reserved