Technical Data Sheet

TEE ECCENTRIC

PE100-RC

long spigot for butt- and electrofusion welding
to completely drain the pipeline

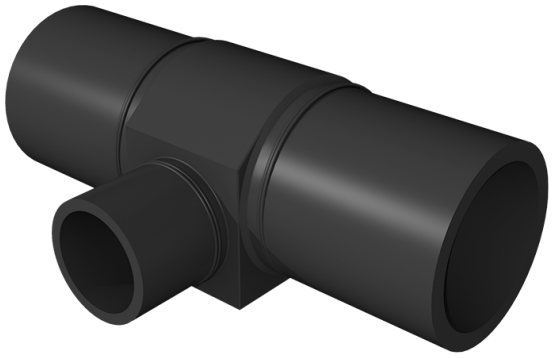

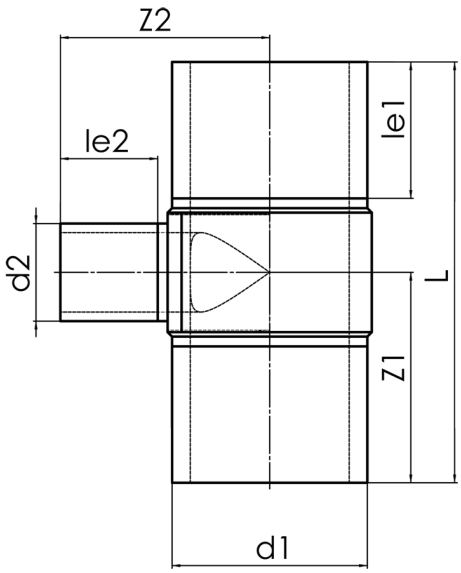

SDR 11

Art. No.	d1 [mm]	d2 [mm]	le1 [mm]	le2 [mm]	L [mm]	z1 [mm]	z2 [mm]	kg
4332311104000125	400	125	300	150	820	410	385	37,11

Other materials, dimensions and pressure classes on request

For questions, please feel free to contact us at: Tel. + 49 281 98 414 - 0

Suitable for gas Suitable for water Pressure class conform

© STAR Piping Systems GmbH
All rights reserved