Technical Data Sheet

TEE REDUCED (SADDLE MOUNTED)

PE100-RC

pressure class conform saddle mounted
long spigot for butt- and electrofusion welding



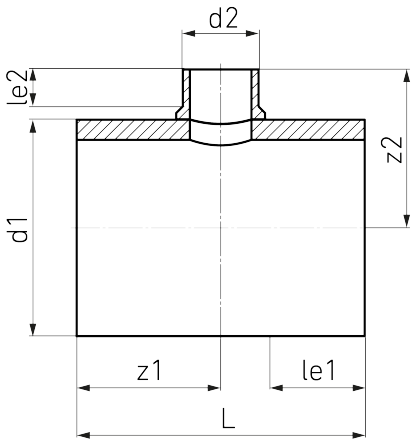

SDR 17

Art. No.	d1 [mm]	d2 [mm]	le1 [mm]	le2 [mm]	L [mm]	z1 [mm]	z2 [mm]	kg
4332581704000140	400	140	300	92	780	390	327	21,83

For questions, please feel free to contact us at: Tel. + 49 281 98 414 - 0

Suitable for water Pressure class conform

© STAR Piping Systems GmbH
All rights reserved