Technical Data Sheet

TEE REDUCED (NON-REINFORCED SADDLE MOUNTED)

PE100-RC

non-reinforced saddle mounted
pressure reduction factor 0,6
long spigot for butt- and electrofusion welding

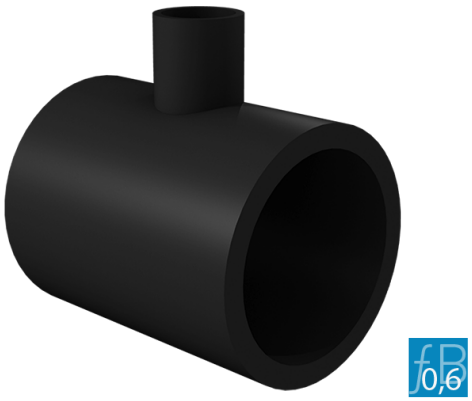

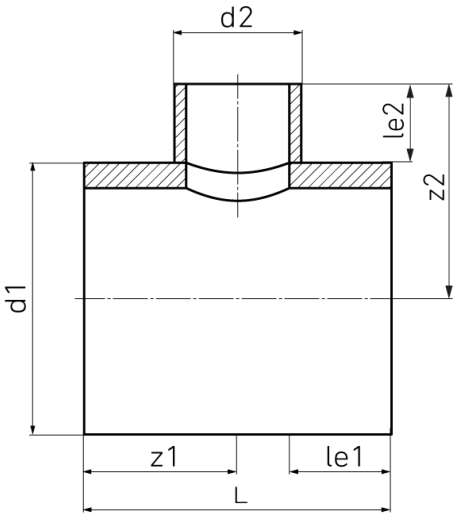

SDR 11

Art. No.	d1 [mm]	d2 [mm]	le1 [mm]	le2 [mm]	L [mm]	z1 [mm]	z2 [mm]	kg
4332681102800200	280	200	250	150	700	350	290	15,07

Other materials, dimensions and pressure classes on request

For questions, please feel free to contact us at: Tel. + 49 281 98 414 - 0

Suitable for water Pressure reduction factor 0,6

© STAR Piping Systems GmbH
All rights reserved