TECHNICAL DATA SHEET

ELECTROFUSION TEE REDUCED

two seperate welding zones from d 200 mm
4,0 mm pin

PE100-RC

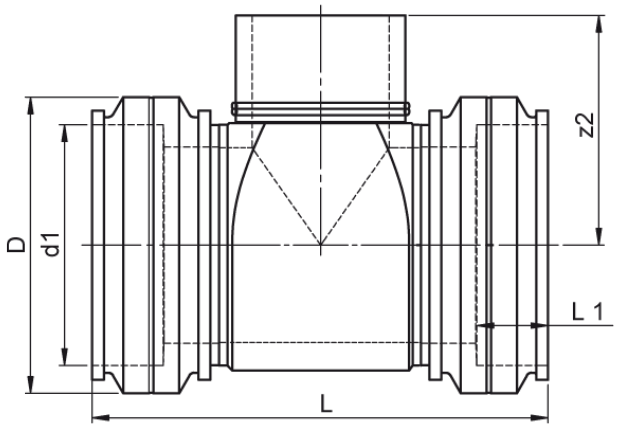

SDR 11

Art. No.	d1 [mm]	d2 [mm]	D [mm]	le2 [mm]	L [mm]	L1 [mm]	z2 [mm]	kg
4332701107100560	710	560	882	350	1475	225	736	332,1

Other materials, dimensions and pressure classes on request

For questions, please feel free to contact us at: Tel. + 49 281 98 414 - 0

© STAR Piping Systems GmbH
All rights reserved