Technical Data Sheet

ELECTROFUSION TEE REDUCED

PE100-RC

two seperate welding zones
4,0 mm pin



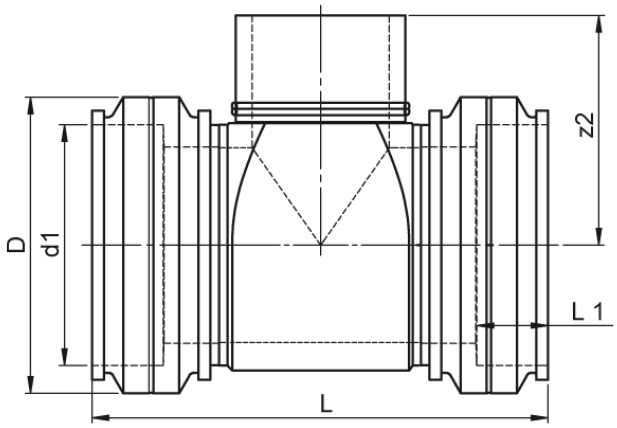

SDR 17

Art. No.	d1 [mm]	d2 [mm]	D [mm]	le2 [mm]	L [mm]	L1 [mm]	z2 [mm]	kg
4332701708000560	800	560	921	350	1425	235	350	245,8

Other materials, dimensions and pressure classes on request

For questions, please feel free to contact us at: Tel. + 49 281 98 414 - 0

Suitable for gas Suitable for water

© STAR Piping Systems GmbH
All rights reserved