Technical Data Sheet

ELECTROFUSION TEE ECCENTRIC

PE100-RC

4,0 mm pin
to completely drain the pipeline



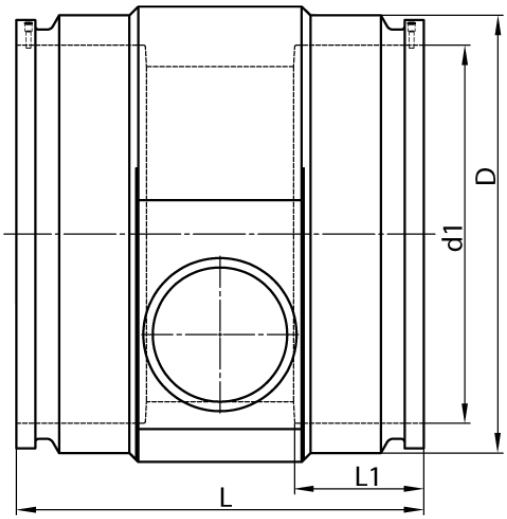

SDR 17

Art. No.	d1 [mm]	d2 [mm]	D [mm]	le2 [mm]	L [mm]	L1 [mm]	z2 [mm]	kg
4332711707100180	710	180	819	150	630	225	600	99,8

Other materials, dimensions and pressure classes on request

For questions, please feel free to contact us at: Tel. + 49 281 98 414 - 0

© STAR Piping Systems GmbH
All rights reserved