TECHNICAL DATA SHEET

REDUCER ECCENTRIC

short spigot for butt welding
to completely drain the pipeline

PE100-RC

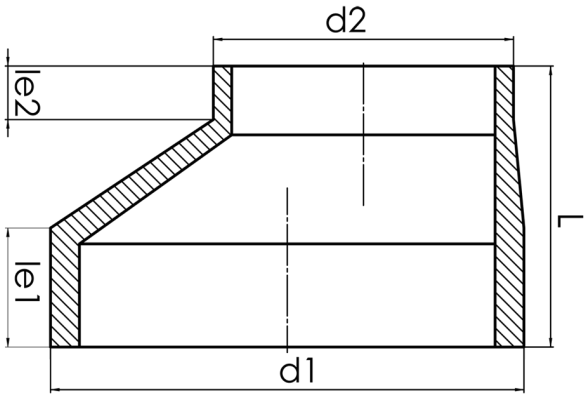

SDR 17

Art. No.	d1 [mm]	d2 [mm]	le1 [mm]	le2 [mm]	L [mm]	kg
4334111702250180	225	180	48	40	120	0,9

Other materials, dimensions and pressure classes on request

For questions, please feel free to contact us at: Tel. + 49 281 98 414 - 0

© STAR Piping Systems GmbH
All rights reserved