Technical Data Sheet

REDUCER ECCENTRIC

PE100-RC

short spigot for butt welding
to completely drain the pipeline



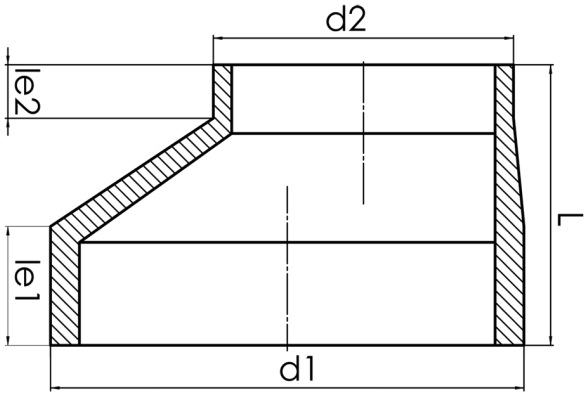

SDR 33

Art. No.	d1 [mm]	d2 [mm]	le1 [mm]	le2 [mm]	L [mm]	kg
4334113302800200	280	200	68	40	160	1

Other materials, dimensions and pressure classes on request

For questions, please feel free to contact us at: Tel. + 49 281 98 414 - 0

Suitable for water Pressure class conform

© STAR Piping Systems GmbH
All rights reserved