Technical Data Sheet

ELECTROFUSION FULL FACE FLANGE

PE100-RC

drilled according to DIN EN 1092-1 PN 16
with EPDM-O-ring gasket and backing ring steel plastic coated
optional with steel hot-dip galvanized or stainless steel backing ring
4,0 mm pin



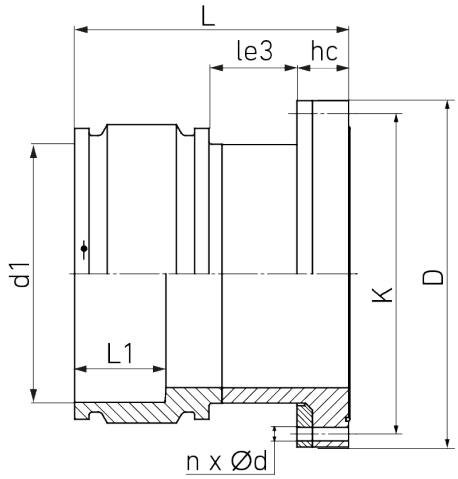

SDR 11

Art. No.	DN [mm]	d1 [mm]	D [mm]	L [mm]	L1 [mm]	K [mm]	n	ød [mm]	hC [mm]	kg
4335551104500500	500	450	715	465	175	650	20	33	105	105,6

Other materials, dimensions and pressure classes on request

For questions, please feel free to contact us at: Tel. + 49 281 98 414 - 0

Suitable for gas Suitable for water

© STAR Piping Systems GmbH
All rights reserved