TECHNICAL DATA SHEET

ELECTROFUSION ELBOW

45??

two seperate welding zones from d 200 mm
4,0 mm pin

PE100-RC

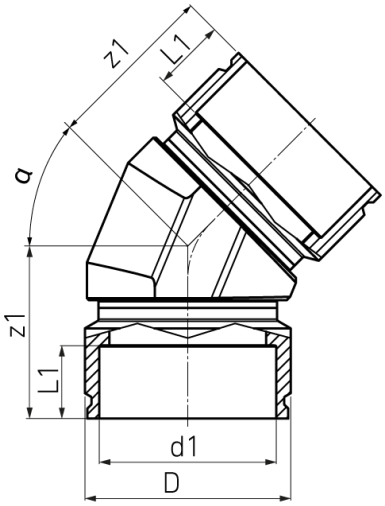

SDR 17

Art. No.	d1 [mm]	D [mm]	L1 [mm]	z1 [mm]	kg
4336341705000000	500	577	175	445	61,6

Other materials, dimensions and pressure classes on request

For questions, please feel free to contact us at: Tel. + 49 281 98 414 - 0

© STAR Piping Systems GmbH
All rights reserved