Technical Data Sheet

FULL FACE FLANGE

PE100

drilled according to DIN EN 1092-1 PN 16
with EPDM-O-ring gasket and backing ring steel plastic coated
optional with steel hot-dip galvanized or stainless steel backing ring
long spigot for butt- and electrofusion welding

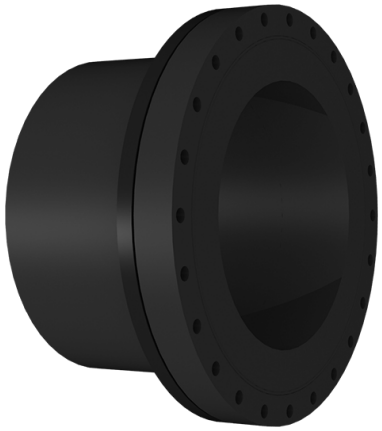

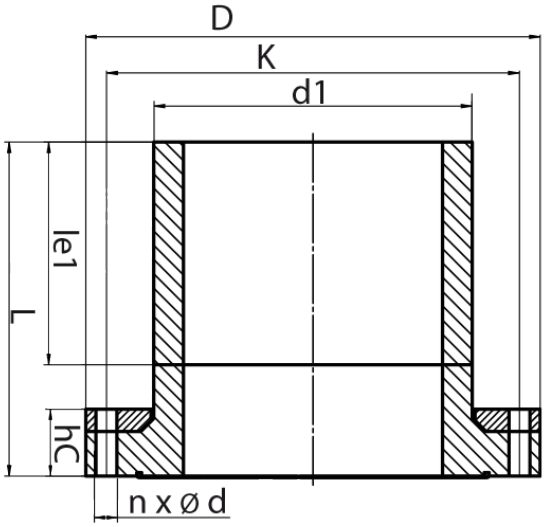

SDR 11

Art. No.	DN [mm]	d1 [mm]	D [mm]	le1 [mm]	L [mm]	K [mm]	n	ød [mm]	M	hC [mm]	kg
4340401104500500	500	450	715	300	475	650	20	33	30	105	97,7

* available for gas pipes with flat surface or NBR-Gaskets

For questions, please feel free to contact us at: Tel. + 49 281 98 414 - 0

gas application on request Suitable for water Pressure class conform

© STAR Piping Systems GmbH
All rights reserved