Technical Data Sheet

BRANCH REDUCED

PE100-RC

α = 45??

long spigot for butt- and electrofusion welding
welded from pipe, non-reinforced



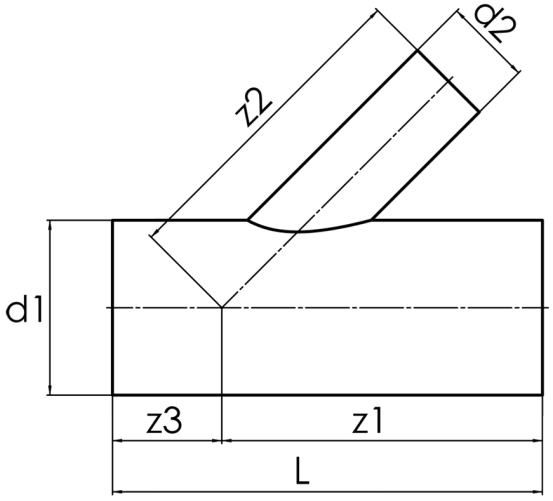

SDR 11

Art. No.	d1 [mm]	d2 [mm]	L [mm]	z1 [mm]	z2 [mm]	z3 [mm]	kg
4342851104000125	400	125	850	625	625	225	35,4

Other materials, dimensions and pressure classes on request
tolerance + / - 2°

For questions, please feel free to contact us at: Tel. + 49 281 98 414 - 0

Suitable for water depressurised

© STAR Piping Systems GmbH
All rights reserved