Technical Data Sheet

# BRANCH REDUCED

**PE100-RC**

**α = 60??**

long spigot for butt- and electrofusion welding
welded from pipe, non-reinforced



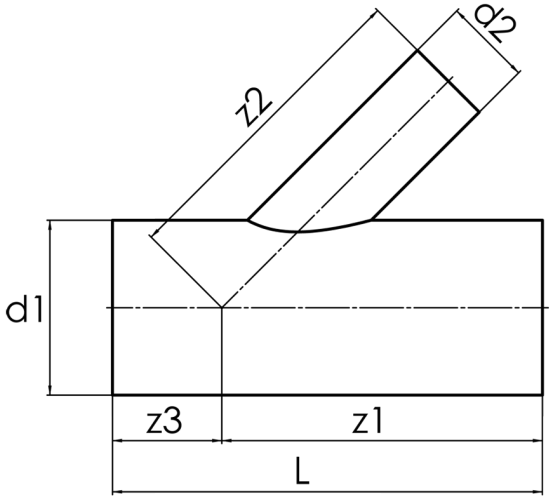


## SDR 11

| Art. No. | d1 [mm] | d2 [mm] | L [mm] | z1 [mm] | z2 [mm] | z3 [mm] | kg |
|---|---|---|---|---|---|---|---|
| 4342861103550125 | 355 | 125 | 750 | 478 | 478 | 272 | 24,7 |

Other materials, dimensions and pressure classes on request
tolerance + / - 2°

**For questions, please feel free to contact us at: Tel. + 49 281 98 414 - 0**

Suitable for water depressurised

© STAR Piping Systems GmbH
All rights reserved