Technical Data Sheet

T-CROSS FOR CONNECTION TO HYDRANT

PE100-RC **Flansch-System mit EPDM O-Ring**

Flange-System with EPDM O-Ring
with special/ or KS-flange connection (PN10/PN16) with plastic coated backing ring
long spigot for butt- and electrofusion welding
reinforced



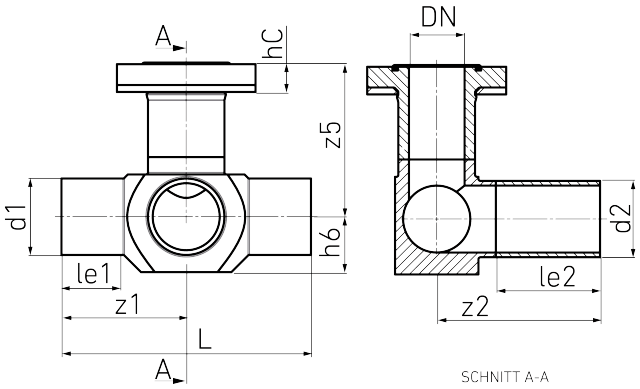

SDR 17

Art. No.	DN [mm]	d1 [mm]	d2 [mm]	le1 [mm]	le2 [mm]	L [mm]	z2 [mm]	h6 [mm]	z5 [mm]	hC [mm]	kg
4351031700900110	80	90	90	85	150	350	235	70	210	40	4,43

other dimensions and pressure classes on request

For questions, please feel free to contact us at: Tel. + 49 281 98 414 - 0

Suitable for water Pressure class conform

© STAR Piping Systems GmbH
All rights reserved