TECHNICAL DATA SHEET

TEE FOR CONNECTION TO HYDRANT

Flansch-System

Flange-System
with special/ or KS-flange connection (PN10/PN16) with plastic coated backing ring
available as flange system or with pre-assembled BAIO?? EU-piece
long spigot for butt- and electrofusion welding
reinforced

PE100-RC

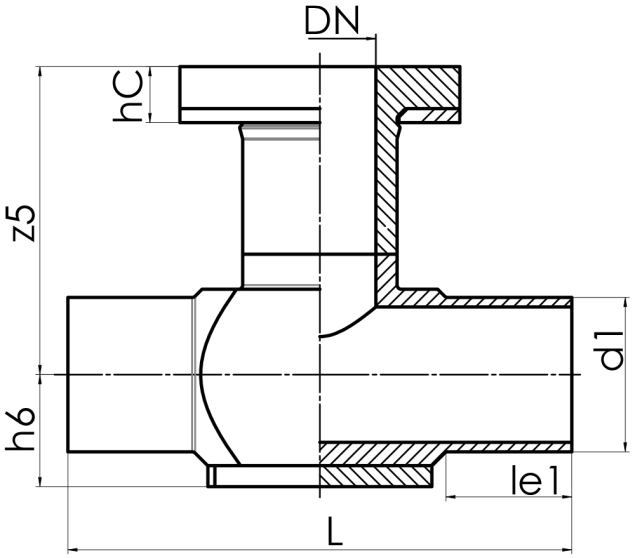

SDR 17

Art. No.	DN [mm]	d1 [mm]	le1 [mm]	le1* [mm]	L [mm]	z1 [mm]	z5 [mm]	hC [mm]	kg
4351151701600110	80	160	105	150	400		240	40	7,04

other dimensions and pressure classes on request

For questions, please feel free to contact us at: Tel. + 49 281 98 414 - 0

© STAR Piping Systems GmbH
All rights reserved