Technical Data Sheet

SEAMLESS BEND

PE100

α = 90??

r = 1 x d
injection moulded
short spigot for butt welding



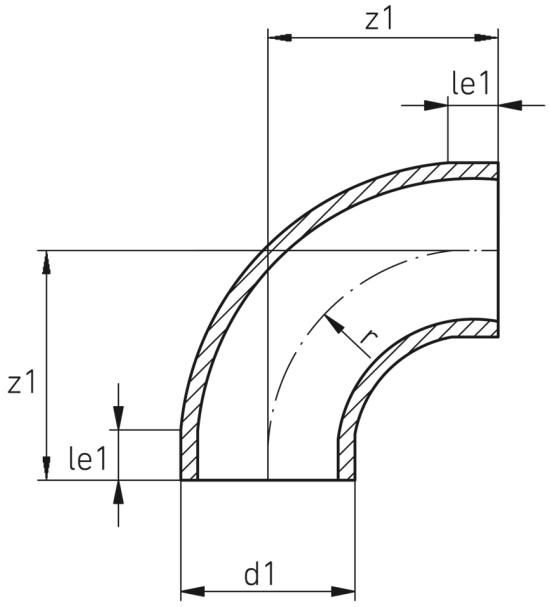

SDR 11

Art. No.	d1 [mm]	le1 [mm]	z1 [mm]	r [mm]	kg
4419901100630000	63	8	77	63	0,12

Other materials on request

For questions, please feel free to contact us at: Tel. + 49 281 98 414 - 0

Suitable for water Pressure class conform

© STAR Piping Systems GmbH
All rights reserved