Technical Data Sheet

TEE REDUCED

PE100-RC

long spigot for butt- and electrofusion welding



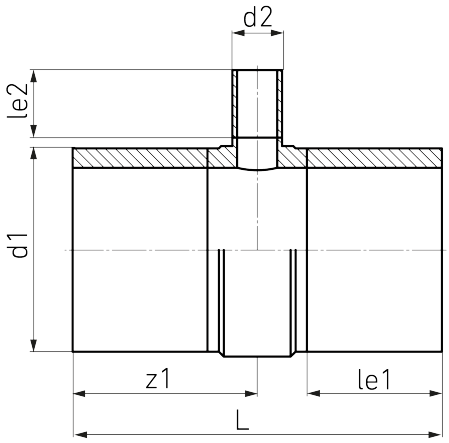

SDR 7,4

Art. No.	d1 [mm]	d2 [mm]	le1 [mm]	le2 [mm]	L [mm]	z1 [mm]	z2 [mm]	kg
4432300702250090	225	90	150	150	505	253	293	10,65

Other materials, dimensions and pressure classes on request

For questions, please feel free to contact us at: Tel. + 49 281 98 414 - 0

Suitable for gas Suitable for water Pressure class conform

© STAR Piping Systems GmbH
All rights reserved