Technical Data Sheet

TEE REDUCED

PE100

long spigot for butt- and electrofusion welding



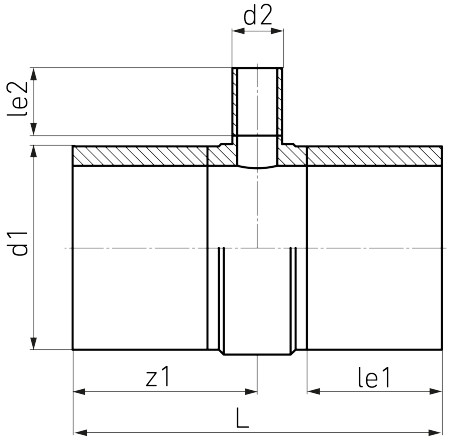

SDR 9

Art. No.	d1 [mm]	d2 [mm]	le1 [mm]	le2 [mm]	L [mm]	z1 [mm]	z2 [mm]	kg
4432300908000500	800	500	350	350	1355	678	786	311,03

Other materials, dimensions and pressure classes on request

For questions, please feel free to contact us at: Tel. + 49 281 98 414 - 0

gas application on request Suitable for water Pressure class conform

© STAR Piping Systems GmbH
All rights reserved