TECHNICAL DATA SHEET

# ELECTROFUSION TEE, EQUAL

two seperate welding zones from d 200 mm
4,0 mm pin

PE100

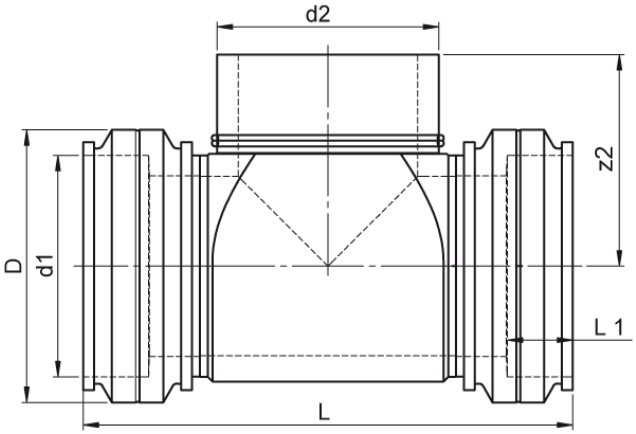


## SDR 11

| Art. No. | d1 [mm] | D [mm] | L [mm] | L1 [mm] | z2 [mm] | kg |
|---|---|---|---|---|---|---|
| 4432601100200000 | 20 | 44 | 98 | 35 | 90 | 0,1 |

Other materials, dimensions and pressure classes on request

For questions, please feel free to contact us at: Tel. + 49 281 98 414 - 0

© STAR Piping Systems GmbH
All rights reserved