Technical Data Sheet

TRANSITION COUPLER

PE100

female thread
reinforcing ring stainless (V2A)
connection to plastic or metal threads
do not use thread sealing pastes that are harmful to PE
install with low mechanical stress and avoid large cyclic temperature changes



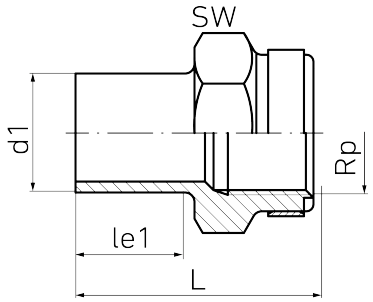

SDR 11

Art. No.	d1 [mm]	Rp [mm]	le1 [mm]	L [mm]	SW [mm]	kg
4450101100320001	32	1"	23	55	46	0,04

For questions, please feel free to contact us at: Tel. + 49 281 98 414 - 0

Suitable for water Pressure class conform

© STAR Piping Systems GmbH
All rights reserved