TECHNICAL DATA SHEET

# TEE, REDUCED

short spigot for butt welding

PP

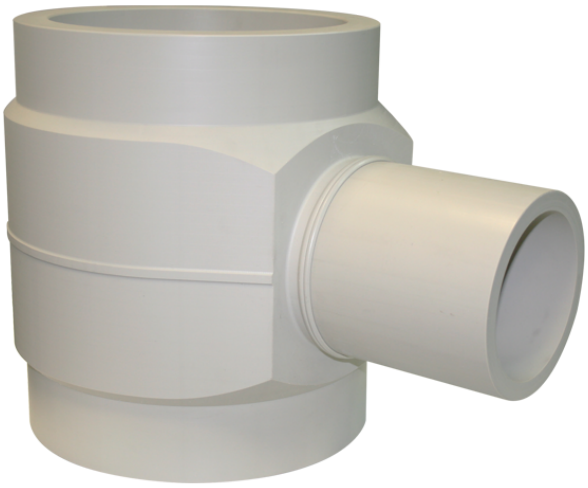

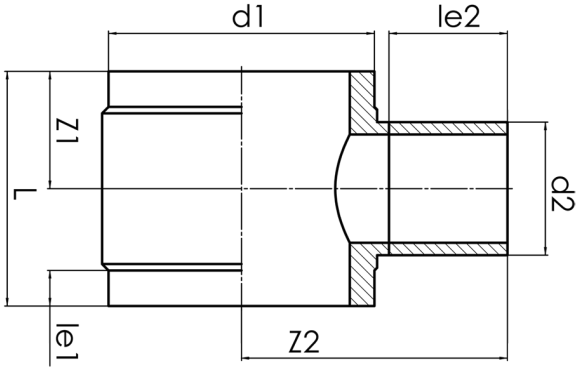


## SDR 11

| Art. No. | d1 [mm] | d2 [mm] | le1 [mm] | le2 [mm] | L [mm] | z1 [mm] | z2 [mm] | kg |
|---|---|---|---|---|---|---|---|---|
| 22228071 | 280 | 75 | 70 | 150 | 281 | 141 | 321 | 6,50 |

other dimensions and pressure classes on request

For questions, please feel free to contact us at: Tel. + 49 281 98 414 - 0

© STAR Piping Systems GmbH
All rights reserved