TECHNICAL DATA SHEET

TEE, REDUCED

long spigot for butt- and electrofusion welding
to completely drain the pipeline

PP

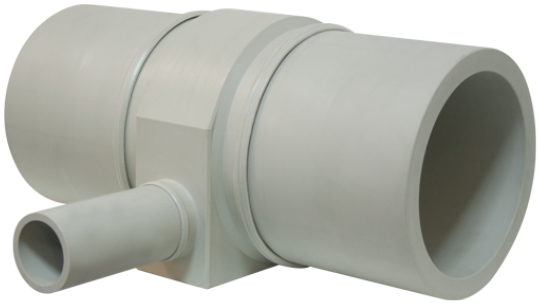

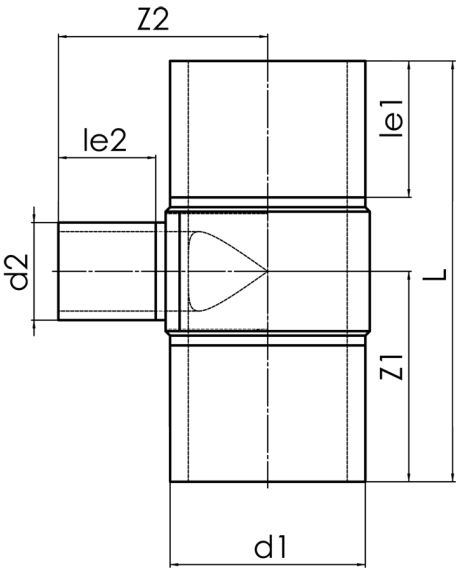

SDR 11

Art. No.	d1 [mm]	d2 [mm]	le1 [mm]	le2 [mm]	L [mm]	z1 [mm]	z2 [mm]	kg
22935251-EX	355	250	300	250	980	490	464	38,00

other dimensions and pressure classes on request

For questions, please feel free to contact us at: Tel. + 49 281 98 414 - 0

© STAR Piping Systems GmbH
All rights reserved