TECHNICAL DATA SHEET

SEAMLESS BEND

60°

ri ≈ 1750 mm
long spigot for butt- and electrofusion welding

PE100-RC

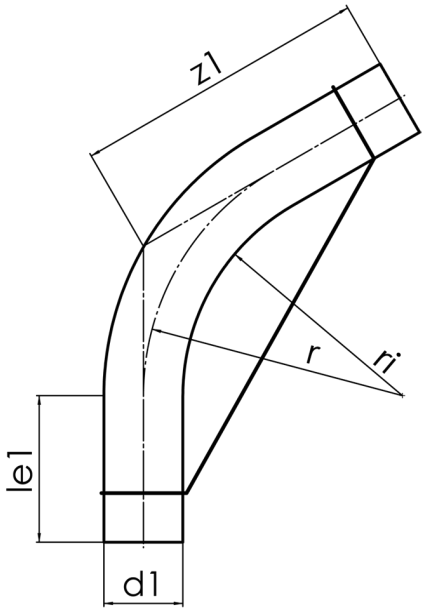

SDR 17

Art. No.	d1 [mm]	le1* [mm]	z1 [mm]	r [mm]	kg
31608251	250	250	2.400	1.875	25,17

Tolerance: α ± 5° | z1 ± 100 mm
necessary fixations will be charged seperately and credited completely by carriage free returning
* minimum „le1“

For questions, please feel free to contact us at: Tel. + 49 281 98 414 - 0

© STAR Piping Systems GmbH
All rights reserved