TECHNICAL DATA SHEET

# TEE, REDUCED

short spigot for butt welding

PE100-RC

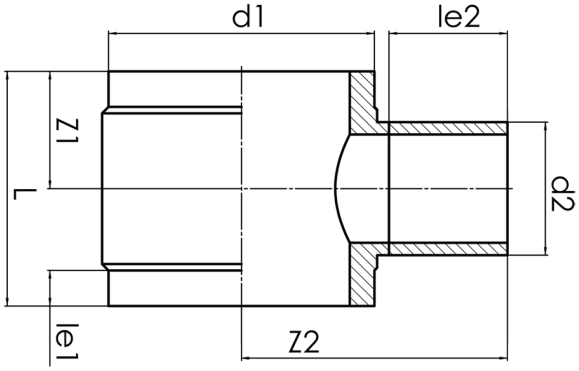


## SDR 26

| Art. No. | d1 [mm] | d2 [mm] | le1 [mm] | le2 [mm] | L [mm] | z1 [mm] | z2 [mm] | kg |
|---|---|---|---|---|---|---|---|---|
| 32293285 | 1400 | 280 | 100 | 250 | 555 | 277,5 | 987 | 184,40 |

Other materials, dimensions and pressure classes on request

For questions, please feel free to contact us at: Tel. + 49 281 98 414 - 0

© STAR Piping Systems GmbH
All rights reserved