TECHNICAL DATA SHEET

X-CROSS FOR CONNECTION TO HYDRANT

Flansch-System mit EPDM O-Ring

Flange-System with EPDM O-Ring
with special/ or KS-flange connection (PN10/PN16) with plastic coated backing ring
long spigot for butt- and electrofusion welding
reinforced

PE100-RC

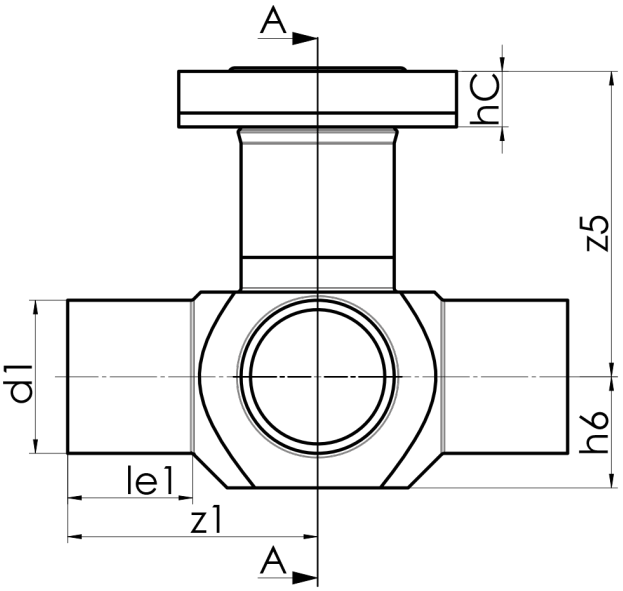

SDR 11

Art. No.	DN [mm]	d1 [mm]	d2 [mm]	le1 [mm]	le2 [mm]	z1 [mm]	z2 [mm]	h6 [mm]	z5 [mm]	hC [mm]	kg
38402222-O	80	225	225	130	150	285	300	145	275	40	18,90

other dimensions and pressure classes on request

For questions, please feel free to contact us at: Tel. + 49 281 98 414 - 0

© STAR Piping Systems GmbH
All rights reserved