TECHNICAL DATA SHEET

SEAMLESS BEND

Normkonform 45°

long spigot for butt- and electrofusion welding
conform to EN 12201

PE100

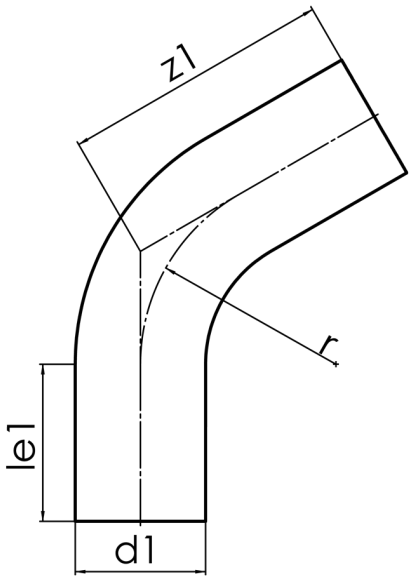

SDR 9

Art. No.	d1 [mm]	le1* [mm]	z1 [mm]	r [mm]	kg
41404119	110	150	240	165	1,79

other dimensions, materials and pressure classes on request
Tolerance: α ± 5° | z1 ± 50 mm
available from an order quantity of 50 pcs. or upon request
* minimum „le1“

For questions, please feel free to contact us at: Tel. + 49 281 98 414 - 0

© STAR Piping Systems GmbH
All rights reserved