TECHNICAL DATA SHEET

SEAMLESS BEND

60°

ri ≈ 1100 mm
long spigot for butt- and electrofusion welding

PE100

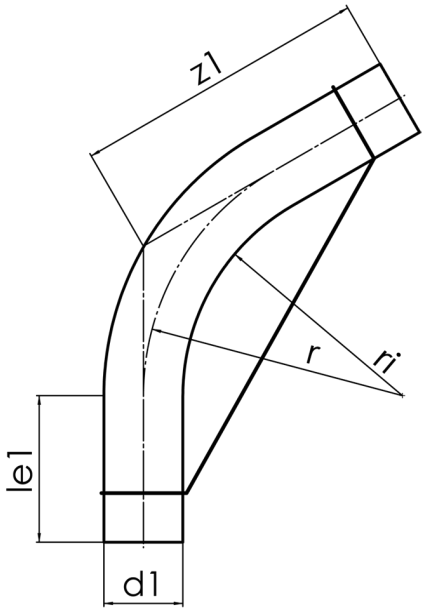

SDR 11

Art. No.	d1 [mm]	le1* [mm]	z1 [mm]	r [mm]	kg
41607142	140	150	1000	1170	7,79

Tolerance: α ± 5° | z1 ± 100 mm
necessary fixations will be charged seperately and credited completely by carriage free returning
* minimum „le1“

For questions, please feel free to contact us at: Tel. + 49 281 98 414 - 0

© STAR Piping Systems GmbH
All rights reserved