TECHNICAL DATA SHEET

BEND INJECTION MOULDED

90°

short spigot for butt welding

PE100

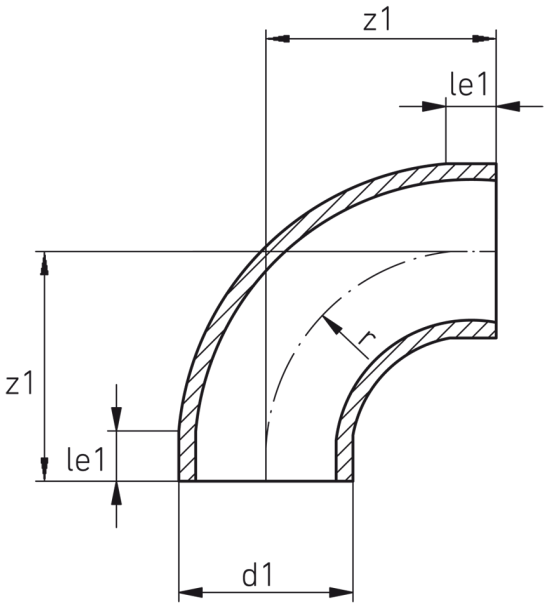

SDR 11

Art. No.	d1 [mm]	le1 [mm]	z1 [mm]	r [mm]	kg
41901252	250	25	275	250	7,70

Other materials on request

For questions, please feel free to contact us at: Tel. + 49 281 98 414 - 0

© STAR Piping Systems GmbH
All rights reserved