TECHNICAL DATA SHEET

BEND, SEGMENT WELDED

90°

long spigot for butt- and electrofusion welding
welded from pipe, non-reinforced

PE100

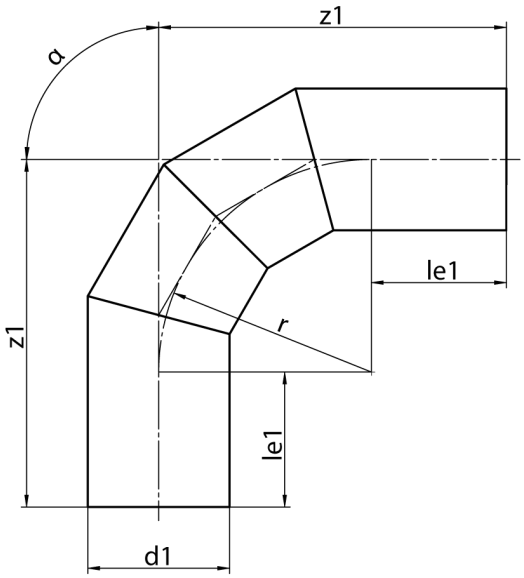

SDR 33

Art. No.	d1 [mm]	le1 [mm]	z1 [mm]	r [mm]	kg
41903403	400	300	900	600	22,48

Other materials, dimensions and pressure classes on request
tolerance + / - 2°

For questions, please feel free to contact us at: Tel. + 49 281 98 414 - 0

© STAR Piping Systems GmbH
All rights reserved