TECHNICAL DATA SHEET

ELECTROFUSION BEND

90°

r ≈ 1,5 x d
two seperate welding zones
4,0 mm pin

PE100

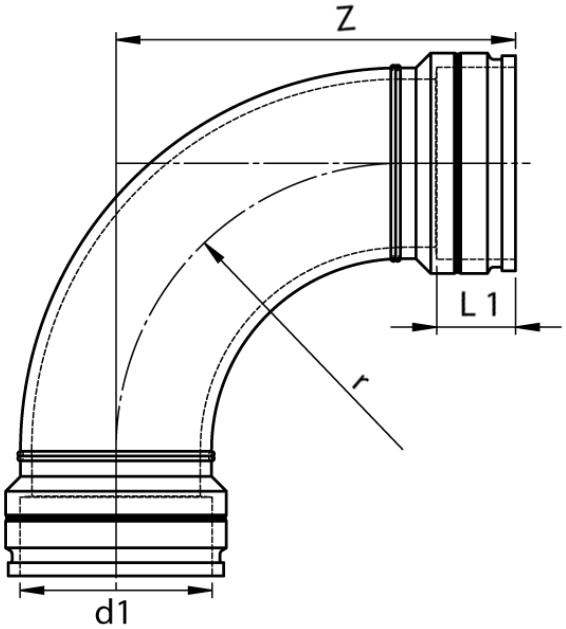

SDR 17

Art. No.	d1 [mm]	L1 [mm]	z1 [mm]	r [mm]	kg
41904801-EF	800	235	1850	1274	383,01

tolerance: α ± 5° | z1 ± 50 mm
Other materials, dimensions and pressure classes on request

For questions, please feel free to contact us at: Tel. + 49 281 98 414 - 0

© STAR Piping Systems GmbH
All rights reserved