TECHNICAL DATA SHEET

TEE, REDUCED

long spigot for butt- and electrofusion welding
welded from pipe, non-reinforced

PE100

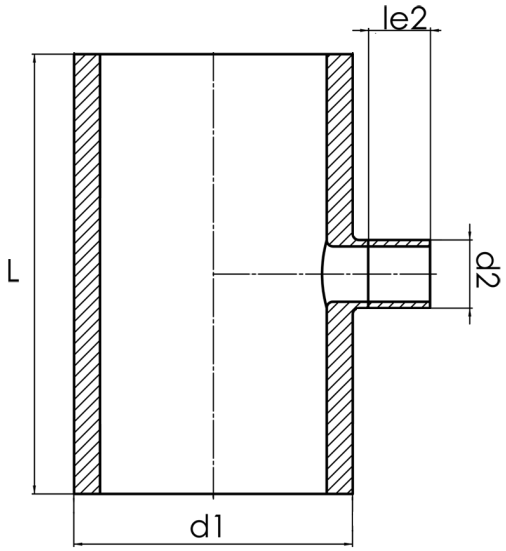

SDR 11

Art. No.	d1 [mm]	d2 [mm]	le1 [mm]	le2 [mm]	L [mm]	kg
42380222	800	225	350	150	1050	165,93

other dimensions and pressure classes on request
tolerance + / - 2°

For questions, please feel free to contact us at: Tel. + 49 281 98 414 - 0

© STAR Piping Systems GmbH
All rights reserved